FCD-10X-52 / 5412058818
FCD-10X-52 EC / 5412071244

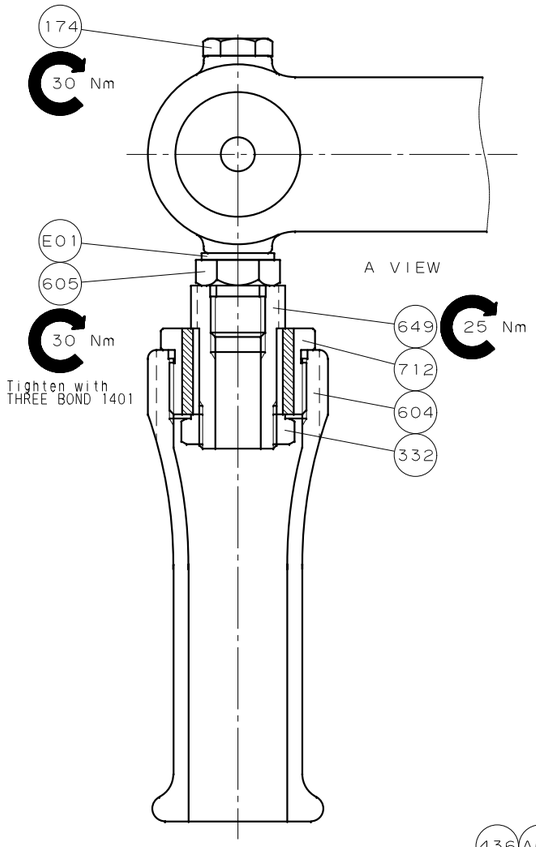

DRAW NO	PARTS NO.	NAME OF PART	QTY
624	D-072624-00	PACKING (D)	1
671	D-072671-00	EXHAUST COVER JOINT	1
712	A-192712-01	DAMPER	1
A01	BB-626	BALL BEARING	1
A02	BB-6200	BALL BEARING	1
A03	BB-6002	BALL BEARING	1
A04	BB-6002	BALL BEARING	1
A05	BB-6200	BALL BEARING	2
A06	BB-608	BALL BEARING	1
A07	NJ202E-TVP2	NEEDLE BEARING	1
B01	SP-322	SPRING PIN	1
B02	SP-2.56	SPRING PIN	1
B30	SP-216	SPRING PIN	1
B31	SP-26	SPRING PIN	1
B41	NR-419	NEEDLE ROLLER	2
B51	NR-1.510.5	NEEDLE ROLLER	22
B71	SP-218	SPRING PIN	1
C01	O-S16	"O" RING	1
C02	O-S10	"O" RING	1
C03	O-P10	"O" RING	1
E01	PW-8	WASHER	1
H01	K-338F	KEY	1
Z50	NP-0740	WARNING STICKER	1

DRAW NO	PARTS NO.	NAME OF PART	QTY
229	D-120229-00	BEARING SPACER	1
237	D-072237-00	MUFFLER PAD	1
250	D-120250-01	EXHAUST COVER	1
332	A-192332-00	LOCK NUT	1
341	D-120341-00	CHUCK COLLAR	1
372	D-120372-00	PLASTIC COVER	1
413	D-120413-00	No.1 PLANET GEAR	2
416	D-120416-00	No.1 PLANET GEAR FRAME	1
417	D-120417-00	No.1 INTERNAL GEAR	1
423	D-120423-01	BEVEL PINION	1
424	D-120424-00	BEVEL PINION SPINDLE	1
426	D-120426-01	BEVEL GEAR	1
430	D-120430-00	No.1 GEAR CASE	1
434	D-120434-00	BEARING WASHER	1
436	D-008436-00	BEARING HOLDER	1
440	A-107440-00	RING	1
441	D-120441-00	SPINDLE (B)	1
444	D-120444-00	INTERNAL GEAR WASHER	1
445	D-120445-02	SPINDLE CASE	1
448	D-120448-00	SPINDLE CASE FLANGE	1
604	A-192604-00	DEAD HANDLE	1
605	A-107605-00	DEAD HANDLE JOINT	1
649	A-192649-00	JOINT	1

DRAW NO	PARTS NO.	NAME OF PART	QTY
101	D-120101-00	HOUSING COVER	1
109	D-120109-00	THROTTLE VALVE BUSHING	1
110	H-001110-02	THROTTLE VALVE	1
113	H-014113-00	THROTTLE VALVE ROD	1
117	G-105117-00	THROTTLE VALVE SPRING	1
119	G-028119-00	THROTTLE VALVE COVER PACKING	1
120	G-028120-00	THROTTLE VALVE COVER	1
121	G-143121-01	THROTTLE VALVE LEVER	1
140	D-120140-00	CUP NUT	1
171	G-146171-00	INLET JOINT(PT)	1
174	A-107174-00	SMALL SCREW	1
183	H-001183-00	LOCK KEY	1
184	G-144184-00	LOCK SPRING	1
201	D-120201-02	HOUSING	1
207	D-004207-00	ROTOR	1
208	G-042208-00	ROTOR BLADE	4
209	G-042209-00	CYLINDER	1
210	D-120210-00	CYLINDER UPPER PLATE	1
211	D-080211-00	CYLINDER LOWER PLATE	1
217	D-120217-00	BEARING COVER	1
221	A-124221-00	SPINDLE BEARING COVER	1
222	A-006222-00	FELT RING	1
225	D-021225-00	PACKING WASHER	2

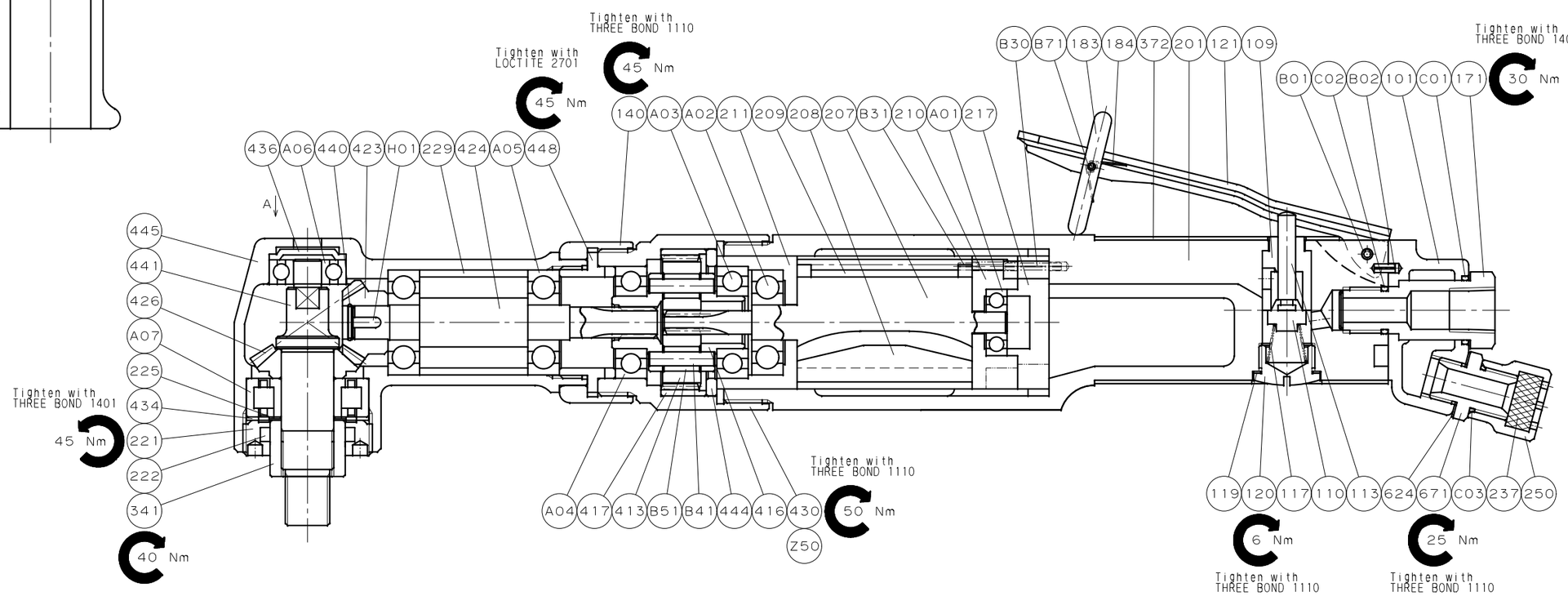

SPECIFICATIONS

Item Code	Model		Stall Torque	Rotational Frequency (At no Load)	Max. Air Consumption	Spindle Thread	Distance Center To Side	Mass	Overall Length	Air Inlet Thread	Air Hose Size
			N·m	min^{-1}	m^3/min		mm	kg	mm		mm
5412058818	FCD-10X-52		12	1000	0.5	1/2-20UNF	21	2.2	377	PT 1/4	9.5
5412071244	FCD-10X-52	EC	12	1000	0.5	1/2-20UNF	21	2.2	377	PT 1/4	9.5

CORNER DRILL

APPROVED BY	NAGATO	TYPE	FCD-10X-52		
CHECKED BY	NISHIDA	DRAWING NO.	5412095864	REVISION	04
DESIGNED BY	YASUBA	FUJI NO.	D-120-A73-0		
DRAWN BY	YASUBA	SCALE	NTS	DATE	2014.05

Fuji Industrial Technique Co.,Ltd.

ST14-063 YASUBA